USN | | | | | | | | | | |

[23ESME11]

FIRST SEMESTER B.Tech EXAMINATION, JANUARY - 2024

ENGINEERING MECHANICS

Time: 3 Hours **Maximum Marks: 100**

Instructions:
i. Missing data may be suitably assumed.
ii. Answer all questions.

		PART-A	**05 X 02=10**		
1.	**a**	Explain the principle of force transmissibility.	L2	CO1	**02**
	b.	Define moment of a force.	L1	CO2	**02**
	c.	Define moment of inertia about an axis.	L1	CO3	**02**
	d.	Write difference between concurrent forces and non-concurrent forces	L1	CO2	**02**
	e.	Define kinetic friction	L1	CO5	**02**
		PART-B	**06 X 05=30**		
2.	**a.**	Explain the principle of force transmissibility.	L2	CO1	**05**
		OR			
	b.	What is moment of a force? How will you explain mathematically?	L2	CO2	**05**
3.	**a.**	State the condition of equilibrium.	L2	CO2	**05**
		OR			
	b.	Find the resultant for the given force system shown in Fig. 3b. Also find the direction and position. 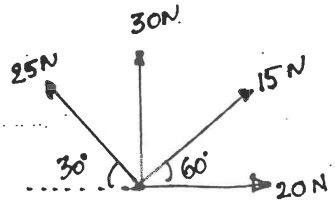 Fig. 3b	L3	CO2	**05**
4.	**a.**	State and prove Lami's theorem of equilibrium	L3	CO2	**05**
		OR			
	b.	Two unlike parallel forces of magnitude 400 N and 100 N are acting in such a way that their lines of action are 150 mm apart. Find the magnitude of the resultant force and the point where the resultant force will be acting.	L3	CO2	**05**
5.	**a.**	Find the value of weight 'W' if the body (Fig.5a) is in limiting	L3	CO5	**05**

		equilibriums condition. 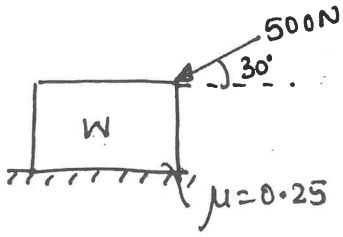 Fig.5a			
		OR			
	b.	Determine the moment of inertia of rectangular section	L3	CO4	**05**
6.	**a.**	A block of weight 200 N is resting on rough horizontal surface. Find the magnitude of the force to be applied at an angle of 30° to the horizontal in order to move the block on the surface shown in Fig 6a. 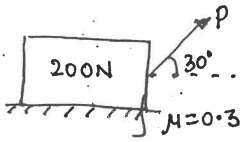 Fig 6a.	L3	CO4	**05**
		OR			
	b.	A block of mass 10 kg is placed on a horizontal surface. The coefficient of static friction between the block and the surface is 0.6 What force is required to just start the block moving?	L3	CO5	**05**
7.	**a.**	Explain free body diagram with an example.	L2	CO2	**05**
		OR			
	b.	State and prove parallelogram law of forces	L3	CO2	**05**
		PART-C	**06 X 10=60**		
8.	a.	Describe the step by step process of finding the centroid of a body.	L3	CO3	**10**
		OR			
	b.	Find the value of force 'P' taking moment about 'A' shown in Fig 8b 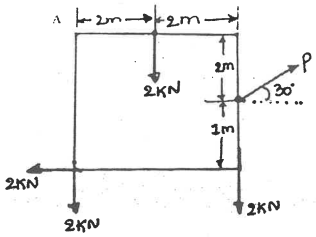 Fig.8b	L3	CO1	**10**

9.	a.	Find the centroid of given problem (Fig.9a). 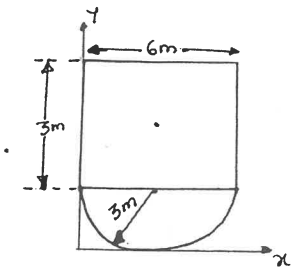 Fig.9a	L3	CO3	**10**
		OR			
	b.	Find the centroid of given problem shown in Fig 9b. 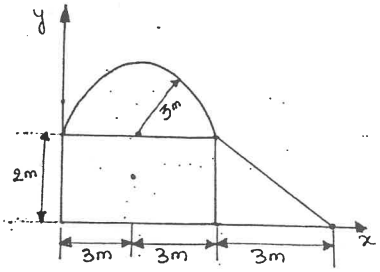 Fig 9a	L3	CO3	**10**
10.	a.	Find the moment of inertia of a T-section about X-X and Y-Y axis passing through the center of gravity of the section. Consider flange area as 150mm X 50mm and web are as 50mm X 150mm.	L3	CO4	**10**
		OR			
	b.	State and prove parallel axis theorem.	L3	CO4	**10**
11.	a.	How are concurrent forces different from non-concurrent forces within a system? Provide examples of each and explain their effects on an object's motion or stability.	L3	CO2	**10**
		OR			
	b.	Find the moment of inertia of a L-section (Fig. 11b) about X-X and Y-Y axis passing through the center of gravity of the section. 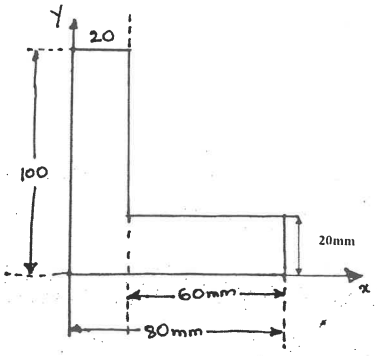 (Fig. 11b)	L3	CO4	**10**

12.	**a.**	Find the resultant for the given force system. Also find the direction and position shown in Fig.12a 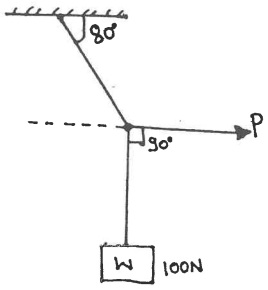 Fig.12a	L3	CO2	**10**
		OR			
	b.	Find the resultant for the given force system. Also find the direction and position Fig.12b 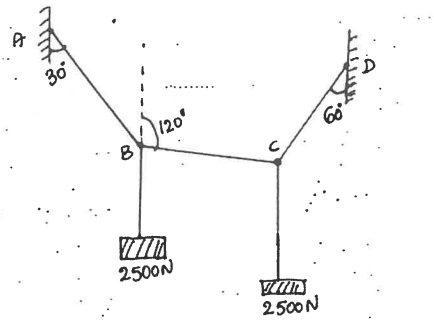 Fig.12b	L3	CO2	**10**
13.	**a.**	Find the centroid of given section shown Fig.13a 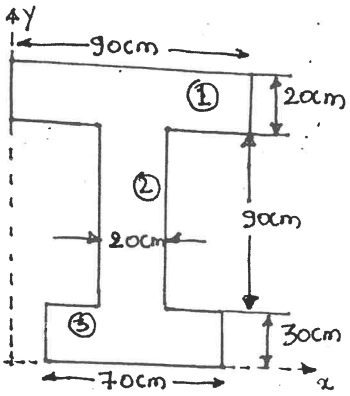 Fig.13a	L3	CO3	**10**
		OR			
	b.	Explain the concept of moment of inertia. Discuss its significance in rotational motion and compare how the moment of inertia differs for different geometrical shapes. Provide examples to illustrate your explanation	L3	CO4	**10**